NOTES:
1. ALL SECURITY CABLES SHALL BE 18AWG STRANDED/TWISTED/SHIELDED. PLEASE NOTE CONDUCTORS AS SHOWN.
2. ALL NETWORK CABLES SHALL BE CAT 5 OR GREATER.
3. ALL WIRING MUST COMPLY WITH NFPA 70 (NEC) AND LOCAL CODES.
4. PLEASE FOLLOW SPECIFIC DEVICE INSTRUCTIONS PROVIDED WITH THE PRODUCTS. THIS IS A PICTORAL REPESENTATION ONLY.

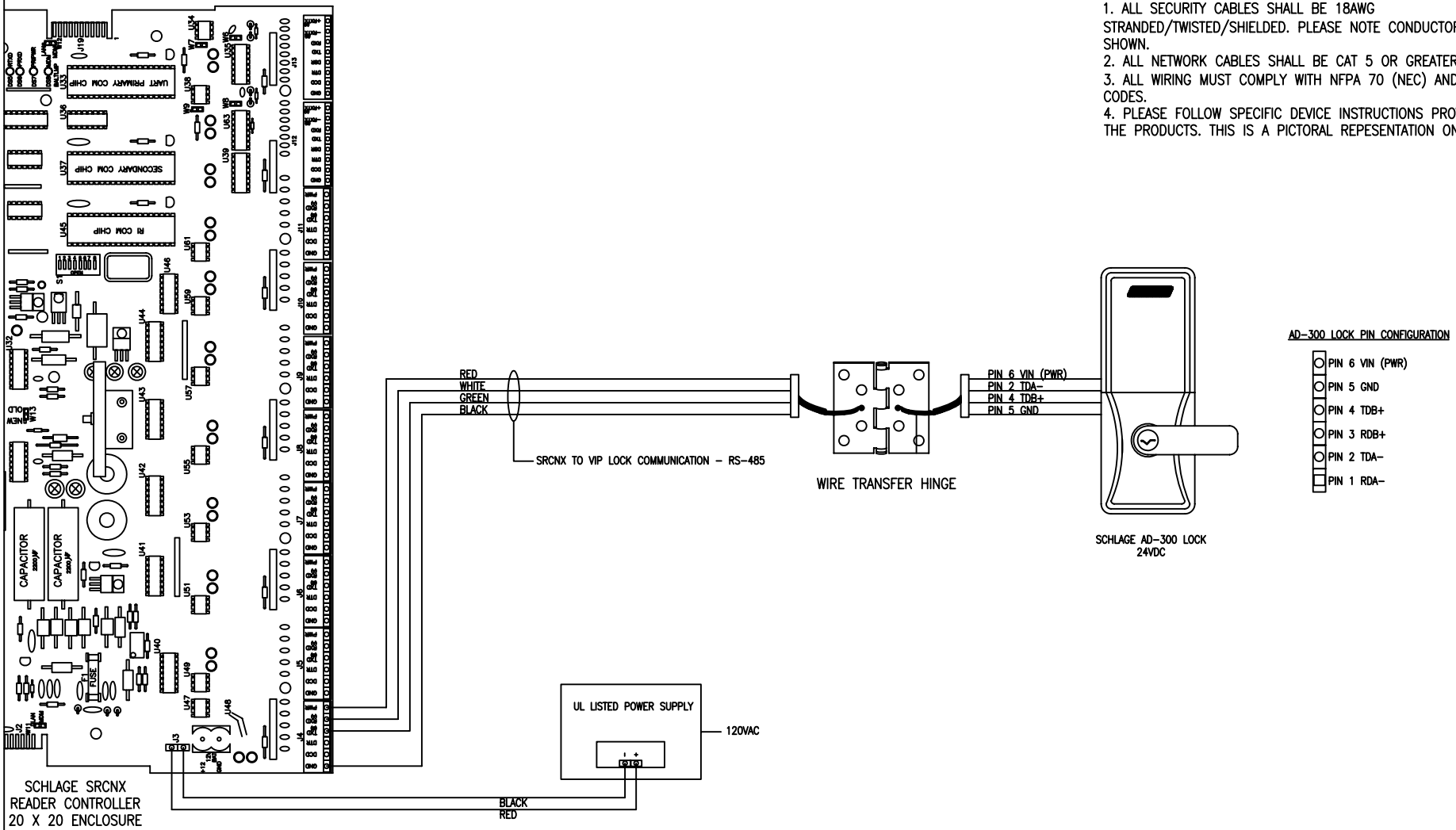

SCHLAGE ELECTRONIC SECURITY
2 CRANBERRY ROAD, PARSIPPANY, NJ
TEL 886-322-1237
www.securitymanagementsystem.schlage.com

WIRING DETAIL: SRCNX, AD-300 LOCK, WIRE TRANSFER HINGE

WARNING: THIS DRAWING IS PROPRIETARY INFORMATION, NOT TO BE RELEASED OR REPRODUCED WITHOUT WRITTEN CONSENT FROM SCHLAGE ELECTRONIC SECURITY.

REV.	DATE	DESCRIPTION	BY

SCALE: NTS	DATE: 1-15-10		
DRAWN-BY: TLM	SIZE	DRAWING-NUMBER	REV.
CHECKED-BY:	B	SMS-AD300-W1	
APP-BY:			