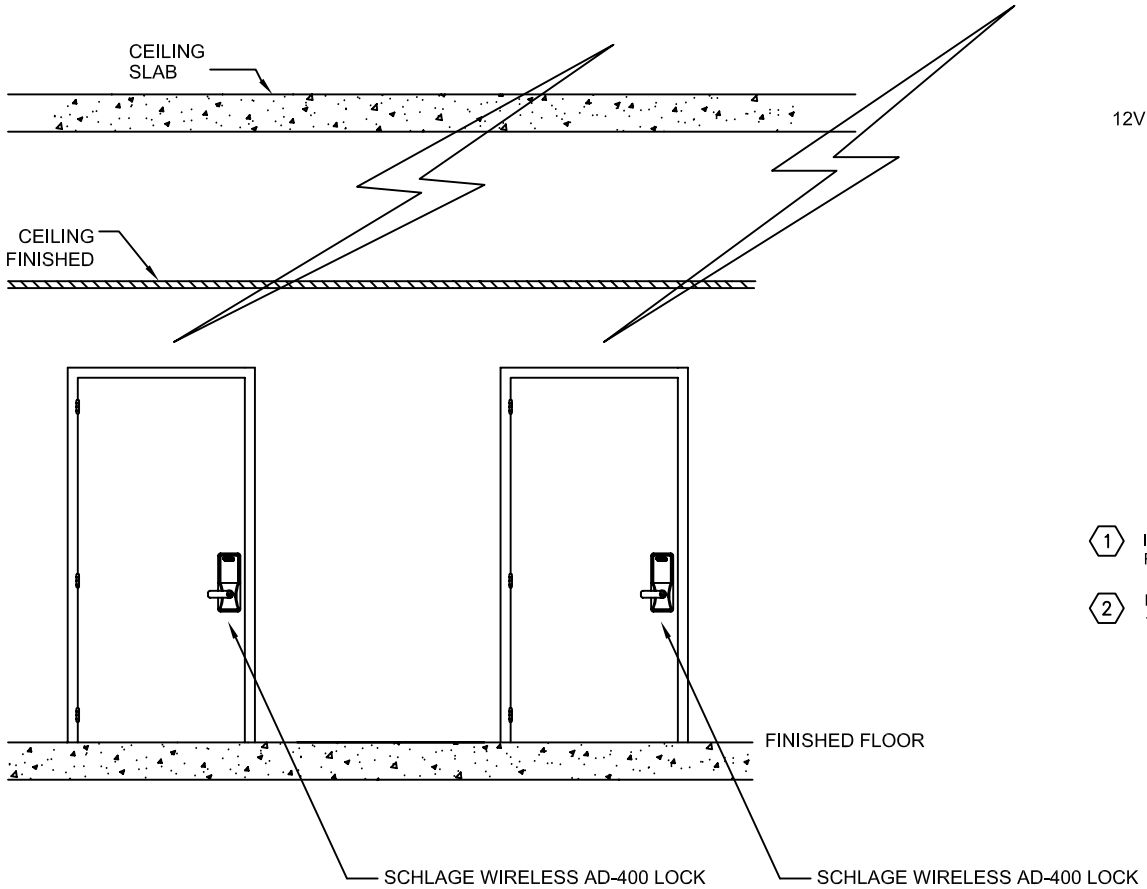

SINGLE DOOR (SECURED SIDE)

N.T.S.

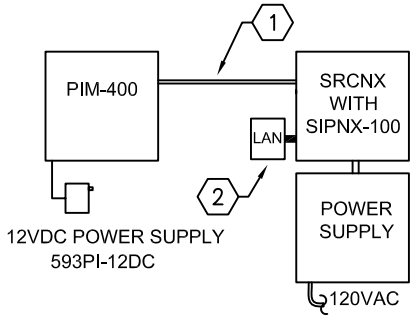

INSTALL HEAD END EQUIPMENT IN
A SECURE LOCATION

1. INSTALL 3/4" CONDUIT FROM THE PIM-SBB TO THE SBB CONTROLLER
RUN 18 AWG - 2 COND. STRANDED/TWISTED/SHEILDED TO SBB

2. PROVIDE NETWORK CONNECTION
1 CAT 5 JUMPER WITH RJ-45 CONNECTORS FROM SBB DEVICE TO NETWORK WALL JACK

NOTES:
1. ALL SECURITY CABLES SHALL BE 18AWG STRANDED/TWISTED/SHIELDED. PLEASE NOTE CONDUCTORS AS SHOWN.
2. ALL NETWORK CABLES SHALL BE CAT 5 OR GREATER.
3. ALL WIRING MUST COMPLY WITH NFPA 70 (NEC) AND LOCAL CODES.
4. PLEASE FOLLOW SPECIFIC DEVICE INSTRUCTIONS PROVIDED WITH THE PRODUCTS. THIS IS A PICTORAL REPESENTATION ONLY.

SCHLAGE ELECTRONIC SECURITY
2 CRANBERRY ROAD, PARSIPPANY, NJ
TEL 886-322-1237
www.securitymanagementsystem.schlage.com

DOOR DETAIL: SRCNX, PIM-400,
WIRELESS LOCKS

WARNING: THIS DRAWING IS PROPRIETARY INFORMATION, NOT TO BE RELEASED OR REPRODUCED WITHOUT WRITTEN CONSENT FROM SCHLAGE ELECTRONIC SECURITY.

REV.	DATE	DESCRIPTION	BY

SCALE: NTS	DATE: 1-15-10		
DRAWN-BY: TLM	SIZE	DRAWING-NUMBER	REV.
CHECKED-BY:	B	SMS-PIM400-D1	
APP-BY:			