AD-400
Wireless Electronic Lock

AD-Series electronic locks from Schlage are designed to be modular and provide more options to choose from, more functionality in the lock and more compatibility with existing systems. Its patent-pending modular design allows the lock to be customized to fit the needs of an application now, and can change to meet future needs without removing it from the door.

Factory orderable options include choices of credential readers, chassis type, network configurations, locking functions, power options, lever styles and finishes. It also offers a wide selection of features that can be configured in the field to customize your openings.

To simplify installation, the AD-Series combines all the hardware components required at the door for a complete access control system into one integrated design that includes the electrified lock, credential reader, request-to-exit and -enter sensors, door position switch, tamper guard and more.

The AD-400 wireless networked lock gives you all the benefits of a hardwired access control system—without the wires. This allows you to secure doors that were traditionally difficult to run wires to in the past—and increase the security throughout your facility.

The AD-400 has a number of features built in that are configurable in the field and a long list of items that can be monitored by access control software.

Features

- Open Architecture platform
- Panel interface options ensure seamless communication with your system
- Non-invasive installations for historic buildings and sensitive areas
- Secure encrypted data transmission
- Unique communication protocols that won't interfere with other wireless networks
- Patent-pending wireless feature that enables efficient centralized lockdown in less than 10 seconds while still optimizing battery life up to 2 years
- Available in cylindrical, mortise, mortise with deadbolt and exit trim
- Compatible with major brands of master key systems

Ingersoll Rand
Security Technologies

Reliable Communications

Secure and reliable wireless communication with the Panel Interface Module (PIM) is accomplished using 900 MHz frequency. 900 MHz band enables longer transmission ranges because signal propagation with longer wavelengths travels a greater distance and better penetrates typical building construction – allowing for simplified system design.

Wake-Up On Radio

This feature enables implementation of wireless locks in applications where centralized lockdown or unlock is required. 'Wake Up on Radio' utilizes patent-pending technology to enable real-time activation at a remote battery-powered wireless lock. The technology is configurable from 10 to 1 second increments.

Panel Interface Module (PIM400)

The PIM400 (sold seperately) is required for communication between the AD-400 wireless lock and the access control panel, and can support up to 16 locks epending on your access control system.

System Configuration

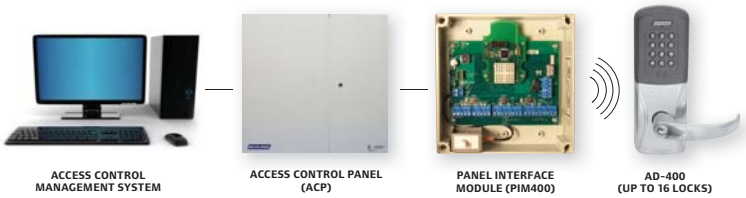

Dimensions

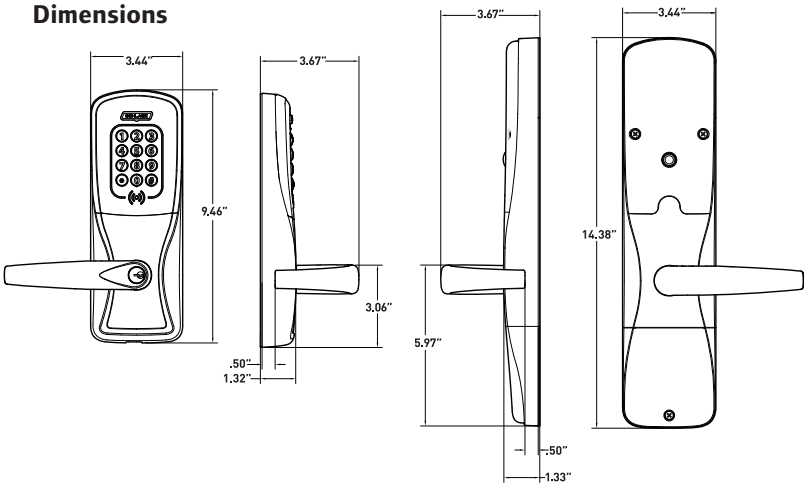

AD-400 Electronic Lock Specifications

Modulation	900 MHz spread spectrum, direct sequence, 10 channels
Frequency Range	902-928 MHz
Transmission/Encryption	AES-128 bit Key
Credential Verification Time	< 1 second*
Response to Command Initiated by Host	Responds to lock/unlock command in less than 10 seconds in battery powered applications (field configurable)
Communication Range	Up to 200 ft w/ obstructions (normal building construction), up to 1000 ft clear line of site
RF Interference Avoidance	Configurable Dynamic Channel Switching
Data Rate	RF: 40 kbps
Visual/Audible Communications	Tri-colored LED's & audible indicators (field configurable)
System Interface	RS485, Wiegand, or Clock & Data via PIM400
Power Supply	4AA, 8AA, 12 VDC or 24 VDC
Voltage Range	4 VDC to 26 VDC
Max Current Requirement	Up to 250 mA
Battery Life	Up to 2 yrs with 4AA (8AA option available for extended battery life)
Operating Temperature/Exterior	-31° to 151°F (-35° to 66°C) (no battery)
Operating Temperature/Interior	32° to 120°F (0° to 49°C) (battery)
Operating Humidity	0 - 100% condensing
Certifications	ANSI/BHMA A156.25 Grade 1, UL294**, UL10 C, FCC Part 15, ADA, RoHS
Accessories	Panel Interface Module (PIM400), Handheld Device (HHD), Remote antennas for PIM400 to extend range

*Lock requires less than 100 msec, response time does not include latency time of ACP.
**Pre-launch datasheet. UL294 certification pending. Certification will be achieved prior to shipment.

Functions

- *Classroom/Storeroom*
- *Office*
- *Privacy*
- *Apartment*

Note: Office function not available with Mortise Deadbolt option. To ensure safety all functions always allow for free egress.

Standard Status Signals

- *Lock/Unlock Status (Clutch Position)*
- *Request-to-Exit Switch*
- *Door Position Switch*
- *Mechanical Key Override*
- *Deadbolt Position*
- *Interior Cover Tamper Guard*
- *Battery Status*
- *Communication Status*
- *Request-to-Enter*

Mechanical Specifications

Chassis	Cylindrical (Based on Schlage ND-Series)	Mortise (Based on Schlage L-Series)
Handing	Handed to Order, Field Reversible	
ANSI Standard	Meets or exceeds A156.25 and A156.2 Series 4000, Grade 1 strength and operational requirements	Meets or exceeds A156.25 and A156.13 Series 1000, Grade 1 Operational and Security
Door Thickness	1-3/4″ standard, 1-3/8″ to 2-3/4″ optional (available in 1/8″ increments)	
Backset	2-3/4″ standard, 2-3/8″, 3-3/4″ and 5″ optional	2-3/4″ only
Latch Bolt	1/2″ throw security latch standard, 3/4″ throw optional	3/4″ throw with anti-friction tongue standard, **1″ throw deadbolt on Mortise Deadbolt option**
Levers	Pressure cast zinc, plated to match finish symbols	Steel, plated to match finish symbols
Strike	ANSI curved lip strike 1-1/4″ x 4-7/8″ x 1-3/16″ lip to center standard, optional strikes, lip lengths and ANSI strike box available	ANSI curved lip strike 1-1/4″ x 4-7/8″ x 1-3/16″ lip to center with dust box standard, optional strikes lip lengths available
Cylinder & Keys	6-pin Everest C123 keyway cylinder with two patented keys standard Additional options available including SFIC, FSIC and competitor brands	

AD-Series Exit Trim

The AD-Series Exit Trim (installed with a universal mounting plate) is compatible with Von Duprin 98/99 exit devices with a low current request-to-exit switch.

Reader Specifications

	Multi-Technology	Smart Card	Proximity
Frequency or Track	125 kHz proximity and 13.56 MHz smart card	13.56 MHz	125 kHz
Standards	ISO 15693 and ISO 14443		None
Maximum Read Range	up to 0.75″		
Compatibility (secure sector)	Schlage, XceedID ISO-X, MIFARE, ISO-X Lite, my-d, FIPS 201/PIV II, DESFire 8-EV1		
Compatibility (serial number only)	MIFARE, DESFire, iCLASS, Inside Pictotag, ST Micro, TI Tagit		Schlage, XceedID, HID, GE/CASI ProxLite and AWID
Compatible Schlage Credentials	Reads same credentials as AD-Series smart card and proximity readers	13.56 MHz Clamshell (SXF9420 & SXF9440), 13.56 MHz Smart card ISOX or MIFARE Glossy White (SXF9520, SXF9540, SXF9551, SXF9558 & SXF9574), 13.56 MHz Key Tag (SXF9640 & SXF9651), 13.56 MHz PVC Patch (SXF9740, SXF9751 & SXF97), Schlage EV1	125 kHz Clamshell Proximity (SXF7410), 125 kHz ISO Card Proximity (SXF7510), 125 kHz ISO Card w/ Magnetic Stripe (SXF7510MS)
Certifications/ Standards	FCC, Canadian FCC, UL294 Listed*, ISO 15693 and ISO 14443	FCC, Canadian FCC, UL294 Listed*	FCC, Canadian FCC, UL294 Listed*
Style/Layout	Option for 12-button, 3x4 matrix backlit keypad		

*Pre-launch datasheet. UL294 certification pending. Certification will be achieved prior to shipment.

Additional Readers

Magnetic Stripe

- Triple Track Reader (1, 2 or 3), field configurable
- Illuminated Card Slot
- ABA, ISO76XX Standard
- Reader can be cleaned without removing lock from door
- Option for 12 button, 3x4 matrix backlit keypad

Keypad

- Backlit keypad
- 12 button, 3x4 matrix

Available AD-Series Reader Modules

- Proximity
- Smart Card
- Multi-Technology

+ KEYPAD

- Proximity
- Smart Card
- Multi-Technology

- Magnetic Stripe

+ KEYPAD

- Magnetic Stripe

- Keypad

Ordering Information

AD	400	CY	70	MG	SPA	626	PD	C123	RH	4B	13-047	10-025	1-3/4
Series	Class	Chassis	Function	Reader	Lever Style	Finish	Lever Cylinder	Keying Type	Handing	Battery	Backset & Latch	Strike	Door Thickness
1	2	3	4	5	6	7	8	9	10	11	12	13	14

Selections Correspond With the Numbers Above

Standard options are indicated in bold.

3 Chassis

CY	Cylindrical
MS	Mortise
MD	Mortise Deadbolt
993R	Exit Trim – Rim/CVR
993S	Exit Trim – SVR
993M	Exit Trim – Mortise

4 Function

70	Classroom/Storeroom
50	Office
40	Privacy
60	Apartment

5 Reader

KP	Keypad
MG	Magnetic Stripe
MGK	Magnetic Stripe + Keypad
PR	Proximity
PRK	Proximity + Keypad
SM	Smart Card
SMK	Smart Card + Keypad
MT	Multi-Technology
MTK	Multi-Technology + Keypad

6 Lever

SPA	Sparta
RHO	Rhodes
ATH	Athens
TLR	Tubular

Available with knurled surface

7 Finish

626	Satin Chrome
605	Bright Brass
606	Satin Brass
612	Satin Bronze
619	Satin Nickel
625	Bright Chrome
643e	Aged Bronze
626AM	Satin Chrome

8 Lever Cylinder Type

PD 6-pin Full Cylinder

See price book for other FSIC, LFIC and Less Cores options available. Compatible with Schlage, Sargent, Corbin, Medeco and Yale

9 Keyway Type

C123 Everest

See price book for other available keyway options including master keying

10 Handing

RH	Right Handed
LH	Left Handed

Field reversible

11 Battery

4B	**4AA**
8B	8AA

12 Backset and Latch

13-047 2-3/4" Backset, Deadlatch, square corner, 1-1/8" x 2-1/4"

See price book for other backset and latch options

13 Strike

Cylindrical

10-025 1-3/16 Lip, ANSI, no box, 1-1/4" x 4-7/8"

See price book for other available cylindrical strikes

Mortise Options

10-072 1-3/16" Lip, 1-1/4" x 4-7/8" square corner, box

See price book for other available mortise strikes

14 Door Thickness

1-3/4"

Other thicknesses available between 1-3/8" and 2-3/4"

See price book for detail

Lever styles

Standard cylinders shown, SFIC and FSIC also available.

Sparta

Rhodes

Athens

Tubular

Warm tone finishes

605
Bright Brass

606
Satin Brass

612
Satin Bronze

643e
Aged Bronze

Cool tone finishes

619
Satin Nickel

625
Bright Chrome

626
Satin Chrome

626AM
Satin Chrome
with Antimicrobial

XceedID, ISOX Lite and ISOX are registered trademarks of XceedID Corporation. GE, CASI, and ProxLite are registered trademarks of General Electric Corporation. MIFARE, DESFire and EV1 are registered trademarks of NXP Semiconductors. HID and iCLASS are registered trademarks of HID Global. my-d is a trademark of Infineon Technologies AG. TI Tagit is a trademark of Texas Instruments. Other product names mentioned herein may be trademarks and / or registered trademarks of other companies.

Ingersoll Rand
Security Technologies

©2009 Ingersoll-Rand Company ES-5531 09/09