P516-129

AD-200

OFFLINE LOCK USER GUIDE

INSTRUCTIONS FOR ADAPTABLE SERIES OFFLINE LOCKS

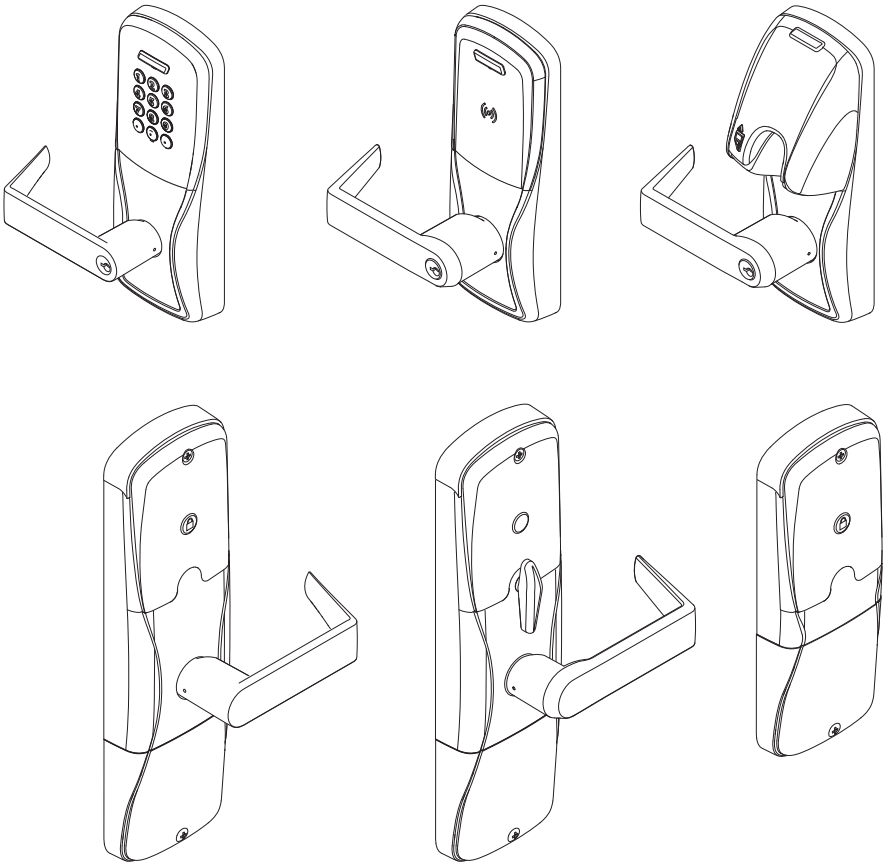

Para el idioma español, navegue hacia www.schlage.com/support.

Pour la portion française, veuillez consulter le site www.schlage.com/support.

CONTENTS

Overview 3
Getting Started 4
Handheld Device (HHD) 4
Construction Access Mode 5
Create the Master Construction Credential - Locks with Card Readers 5
Add User Credentials - Locks with Card Readers 5
Cancel Construction Access Mode 5
Locks with Keypads 5
Manual Lock Programming 6
Credential Types 6
Programming Legend 6
Using the Lock 8
Error Codes 9
Testing 9
Mechanical Testing 9
Electronic Testing 9
Resetting To Factory Defaults 10
LED Reference 10
Schlage Button 10
Optional Inside Push Button (IPB) 10
Batteries 11
Installing or Replacing Batteries 11
Low Battery Indications 11
Battery Failure Modes 11
External Power Supply 12
Troubleshooting 12

www.schlage.com/support

866.322.1237

OVERVIEW

The Schlage AD-200 is an off-line electronic lock in the AD-Series product line.

- May be powered by batteries or connected to external power using a UL 294 Listed power supply capable of sourcing at least 250 mA @ 12 to 24 VDC. See *Batteries* on page 11, or *External Power Supply* on page 12 for more information.
- Outside lever is normally locked.
- Inside lever always allows egress.
- The lock maintains an audit trail of events.
- Configured using the Handheld Device (HHD). See *Handheld Device (HHD)* on page 4 for more information.

Outside

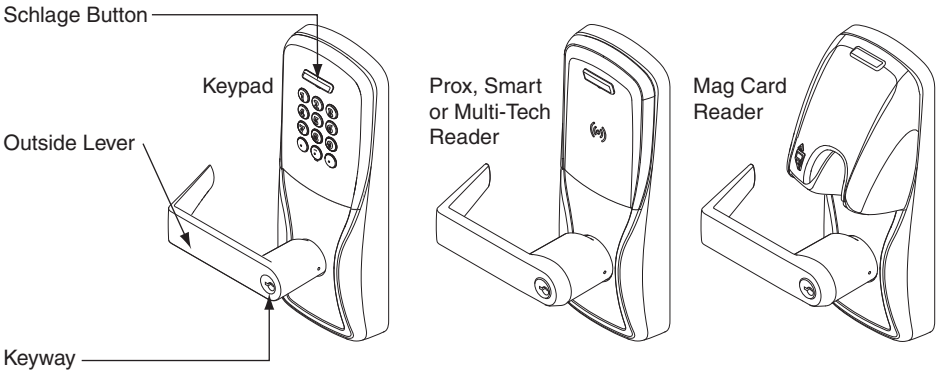

Inside

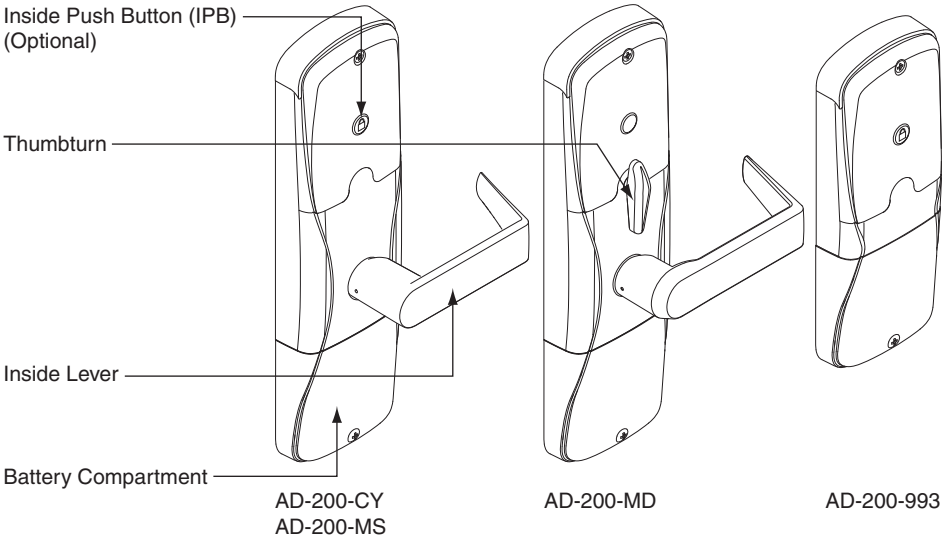

GETTING STARTED

Follow these steps when setting up a new lock.

1. Install the lock. See the installation guide that came with the lock, or visit www.schlage.com/support, for more information.
2. Make sure the batteries are installed properly. See *Batteries* on page 11 for more information.
3. Configure the Master Construction Credential (where applicable). See *Construction Access Mode* on page 5 for more information. The lock should remain in Construction Access Mode until you are ready to set up the rest of the system.
4. Test the lock for proper mechanical and electronic operation. See *Testing* on page 9 for more information.
5. When ready to set up for normal use, program the user credentials. See *Manual Lock Programming* on page 6 for more information.

   ➔ *Programming the lock with the HHD will remove all credentials that were added using the master construction credential.*
6. Consult the Schlage Utility Software User Guide for information about configuring the lock.
7. Familiarize yourself with the information in this guide.

! ***Save this user guide for future reference.***

HANDHELD DEVICE (HHD)

! ***The Handheld Device is used for programming and setup only.***

The Handheld Device (HHD) is used to configure locks. This includes transferring data files between the access control software and locks. For information about the HHD, see the Schlage Utility Software User Guide.

CONSTRUCTION ACCESS MODE

Construction Access Mode is used to allow access before the lock has been programmed, and for testing purposes.

- Enabled by default.
- The lock will remain in Construction Access Mode until the mode is cancelled as described below.
- No audits are captured while lock is in Construction Access Mode.

TIPS

Use the same Master Construction Credential for all the locks in the facility.

If you present the first card to a new lock to create the Master Construction Credential and the card is not accepted, the lock has either been programmed or already has a Master Construction Credential.

If the Master Construction Credential cannot be located, or to put the lock back into construction access mode, reset the lock to factory settings. See *Resetting To Factory Defaults* on page 10 for more information.

Create the Master Construction Credential - Locks with Card Readers

! *The first card presented to a new lock automatically becomes the Master Construction Credential!*

After you have created the Master Construction Credential, you can then use that card to add construction access mode user credentials.

➔ *The Master Construction Credential will not grant access. It is used only to add additional credentials.*

Add User Credentials - Locks with Card Readers

1. Present the Master Construction Credential to the lock. The Schlage button will light green.
2. Present the user credential to be added within twenty (20) seconds. The user credential will be added to the lock database.
3. To test enrolled user credential, present the credential. The Schlage button will blink and the lock will unlock.

   ➔ *Credentials added using the Master Construction Credential will have normal 24/7 access.*

Cancel Construction Access Mode

Do one of the following:

- Authenticate or program the lock with the HHD. See the Schlage Utility Software User Guide for more information.
- Reset the lock to factory settings. See *Resetting To Factory Defaults* on page 10 for more information.
- Create a new master programming PIN code.

! *When construction mode is cancelled, the Master Construction Credential and all other credentials added using the Master Construction Credential will no longer function.*

Locks with Keypads

In the factory default reset state, offline locks with keypads, with or without additional credentials, have a default PIN of 13579, which can be used for installation, testing and construction access. To test, enter default PIN. The Schlage button will blink and the lock will unlock. The default PIN is automatically deleted when a new programming credential is created, or the lock is programmed with the Schlage Utility Software (SUS).

MANUAL LOCK PROGRAMMING

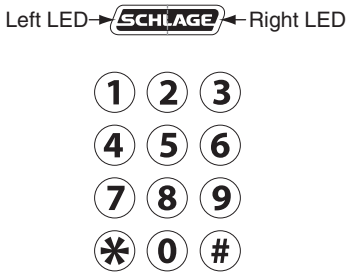

TIPS

The Schlage button has two different LEDs, one on the left and one on the right.

Press the Schlage button to activate the keypad backlight.

All locks have a default programming code of 97531.

All locks have a default normal use code of 13579.

! ***When adding a card credential, the 3-6 digit code (PIN) entered prior to presenting the card becomes the credential reference number. This number can be used to delete a card without physically having the card. Keep a log of all issued credential reference numbers and codes for future reference.***

Credential Types

Credential Type	Function	Description
Programming	Used to program the lock. Does not unlock the lock	Five-digit code OR card
Normal Use	Unlocks the lock.	PIN (3 - 6 digits) OR card
Normal Use +PIN		PIN (3 - 6 digits) AND card
Toggle	Changes the state of the lock from locked to unlocked, or vice versa, unless in a Freeze state.	PIN (3 - 6 digits) OR card
Toggle +PIN		PIN (3 - 6 digits) AND card
Freeze	Freezes the lock in the current state. Lock remains frozen until Freeze credential is presented again.	PIN (3 - 6 digits) OR card
Freeze +PIN		PIN (3 - 6 digits) AND card
Pass-through	Unlocks a lock momentarily, regardless of state. Overrides a lock in Freeze state.	PIN (3 - 6 digits) OR card
Pass-through +PIN		PIN (3 - 6 digits) AND card

Programming Legend

Symbol	Description
[Programming Code]	Five-digit code, identical to programming credential code listed in the Credential Types table.
Programming Card	Programming Card, identical to programming credential card listed in the Credential Types table.
[PIN]	Three- to Six-digit code. A PIN can be any of the PIN code types listed in the Credential Types table. A PIN entered before a card credential becomes the credential reference number.
*	Asterisk key on the keypad
0 - 9	Number keys on the keypad
SCHLAGE	Schlage button

Function	Press/Present	Wait For Confirmation[1]
Change [Programming Code]	[Programming Code] ⊛ OR Programming Card 7 ⊛ New [Programming Code] ⊛ New [Programming Code] ⊛	Wait for SCHLAGE to stop flashing between each step.
Change Programming Card	[Programming Code] ⊛ OR Programming Card 7 ⊛ New Programming Card	Wait for SCHLAGE to stop flashing between each step.
Add Normal Use Credential	[Programming Code] ⊛ OR Programming Card 3 ⊛ ► New [PIN] ⊛ ⊛ (for PIN only) OR New Card add another credential OR ⊛ to finish	Wait for SCHLAGE to stop flashing between each step.
Add Normal Use +PIN Credential	[Programming Code] ⊛ OR Programming Card 3 3 ⊛ 3 1 1 ⊛ ► New [PIN] ⊛ ⊛ (for PIN only) OR New Card add another credential OR ⊛ to finish	Wait for SCHLAGE to stop flashing between each step.
Add Toggle Credential	[Programming Code] ⊛ OR Programming Card 3 3 ⊛ 1 9 1 ⊛ ► New [PIN] ⊛ ⊛ (for PIN only) OR New Card add another credential OR ⊛ to finish	Wait for SCHLAGE to stop flashing between each step.
Add Toggle +PIN Credential	[Programming Code] ⊛ OR Programming Card 3 3 ⊛ 3 9 1 ⊛ ► New [PIN] ⊛ ⊛ (for PIN only) OR New Card add another credential OR ⊛ to finish	Wait for SCHLAGE to stop flashing between each step.
Add Freeze Credential	[Programming Code] ⊛ OR Programming Card 3 3 ⊛ 1 1 5 ⊛ ► New [PIN] ⊛ ⊛ (for PIN only) OR New Card add another credential OR ⊛ to finish	Wait for SCHLAGE to stop flashing between each step.

1 Other lights may show before the final confirmation. Wait for the final confirmation before continuing to the next step.

Function	Press/Present	Wait For Confirmation[1]
Add Freeze +PIN Credential	[Programming Code] ⊛ OR Programming Card ③ ③ ⊛ ③ ① ⑤ ⊛ ► New [PIN] ⊛ ⊛ (for PIN only) OR New Card add another credential OR ⊛ to finish	Wait for SCHLAGE to stop flashing between each step.
Add Pass Through Credential	[Programming Code] ⊛ OR Programming Card ③ ③ ⊛ ① ① ⑨ ⊛ ► New [PIN] ⊛ ⊛ (for PIN only) OR New Card add another credential OR ⊛ to finish	Wait for SCHLAGE to stop flashing between each step.
Add Pass Through +PIN Credential	[Programming Code] ⊛ OR Programming Card ③ ③ ⊛ ③ ① ⑨ ⊛ ► New [PIN] ⊛ ⊛ (for PIN only) OR New Card add another credential OR ⊛ to finish	Wait for SCHLAGE to stop flashing between each step.
Delete Credential	[Programming Code] ⊛ OR Programming Card ⑤ ⊛ ► Credential [PIN] ⊛ delete another credential OR ⊛ to finish	Wait for SCHLAGE to stop flashing between each step.
Change Relock Time	[Programming Code] ⊛ OR Programming Card ⑨ ⑨ ⊛ ① ⊛ ① to add 1 second AND/OR ⑤ to add 5 seconds ⊛ to finish	Wait for SCHLAGE to stop flashing between each step.

1 Other lights may show before the final confirmation. Wait for the final confirmation before continuing to the next step.

USING THE LOCK

After credentials have been programmed, present credentials to operate the lock as follows:

Credential Type	Action			
Credential	Present credential to reader ➔		Green blink and access granted	
+ PIN Credential	Present credential to reader ➔	Press PIN ➔	Within 5 seconds, Press #[1] ➔	Green blink and access granted

1 The "#" key is used as ENTER key for PINs with fewer than the minimum number of digits. Default minimum digits is 6. This can be configured with the HHD, so users do not have to push the **#** key.

ERROR CODES

➔ *All error code blink patterns are accompanied by 2 short beeps.*

# of Red Blinks (Schlage Button)	Error Code Description
1	Computer programming error (not complete).
2	Too long user/master code entered. Code length cannot exceed 8 digits.
3	Memory full, too many codes. Delete some codes.
4	Master code cannot be deleted, only changed.
5	Master code entries do not match. Master code not changed.
6	Invalid command. Invalid function code entered.
7	Code not found.
8	Code too short. Minimum master code length is five (5) digits, minimum user code length is three (3) digits.
9	Not a unique code.
10	Manual programming not allowed.

TESTING

If you encounter problems while performing any of the following tests, review the installation guide and correct any problems.

Mechanical Testing

1. Insert the key into the keyway and rotate the key, or the key and the lever, to open the door. Operation should be smooth, and the latch should retract.
2. Insert the key into the keyway and rotate the key, or the key and the outside lever, to open the door. Operation should be smooth, and the latch should retract.

Electronic Testing

1. For locks with a keypad, press any number key. The lock will beep. Use the default PIN to verify access in construction mode.
2. Press the Schlage button one time. The keypad backlight will light blue.
3. For locks with a card reader, present a credential to the reader. The lock will beep and the Schlage button will light green. The Schlage button will light red when the credential is not valid for the lock.

➔ *The first credential presented to a new lock becomes the Master Construction Credential. See Getting Started on page 4 for more information.*

RESETTING TO FACTORY DEFAULTS

! ***All information in the lock will be deleted and reset to factory defaults!***

1. Remove the top inside cover.
2. Press and hold Schlage button until two (2) beeps sound (10 seconds).
3. Release the Schlage button.
4. Press and release the inside push button (IPB) three (3) times within 10 seconds. One beep will sound and one red blink will occur with each press.
5. The Schlage button and IPB will both light green for one second and a one-second beep will be heard. This indicates that the lock has been reset.

   ➔ *If IPB is not pressed 3 times within 10 seconds, two beeps with two red blinks indicate timeout*
6. Replace the top inside cover.

➔ *The Magnetic Reader will revert to Track 2 after default reset. See the Schlage Utility Software User Guide for information on how to change track.*

LED REFERENCE

Most LED and beep indicators are configured using the HHD. See the Schlage Utility Software User Guide for more information.

Schlage Button

Condition	Lights
Access denied	2 red blinks
Access denied, user outside time zone	4 red blinks
Factory default reset	Solid red while clearing memory, then one-second solid green when complete.
Waiting for PIN (Card + PIN)	Mode 0 only: 5 left red with right green blinks, then solid right green
Low battery indicator, AA batteries	9 left red blinks
Low battery indicator, coin cell battery	9 right red blinks
Momentary unsecured access	1 green blink, then one red blink on relock
Toggle unsecured	2 green blinks
Toggle secure (relocking)	1 red blink
HHD authentication	Left green solid
USB active with no physical connection	Left green blinking

Optional Inside Push Button (IPB)

Action	Lights
Classroom, Office or Apartment Mode	
Press IPB to lock	1 red blink
Press IPB to unlock	1 green blink
Privacy Mode	
With door closed, press IPB to engage privacy	4 green blinks
With door closed, press IPB to release privacy[1]	4 red blinks

1 If DPS is used, then opening door will also release privacy. If mortise deadbolt is used, then retracting the deadbolt will also release privacy.

BATTERIES

Installing or Replacing Batteries

1. Remove the battery cover.
2. Remove the Battery Bracket.
3. Install the new batteries (Install only new AA Alkaline batteries).
4. Install the Battery Bracket.
5. Connect the batteries.
6. Reinstall the battery cover.

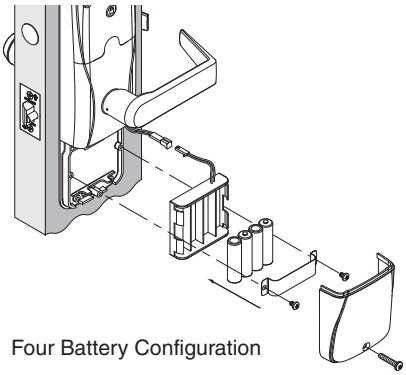

Four Battery Configuration

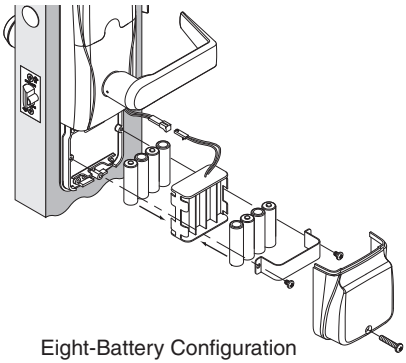

Eight-Battery Configuration

Low Battery Indications

➔ *Changing batteries does not affect any programmed data. Battery voltage can be checked with the handheld device.*

Condition	Indicator	Solution
Batteries Low	After credential is presented, 9 red blinks of Schlage button. (Left = AA, Right = Coin Cell), then normal indicator.	Replace batteries immediately to avoid battery failure. Lock is intended to operate for 500 cycles in low battery condition.
Battery Failure (configured by HHD)	No LED or beeps Valid credentials do not grant access	Replace batteries immediately. Mechanical override key must be used to unlock lock

Battery Failure Modes

➔ *The battery failure is set using the Handheld Device. See the Schlage Utility Software User Guide for more information.*

Mode	Description
Fail As-Is (default)	Lock remains in current state until batteries are replaced.
Fail Unlocked[1]	Lock unlocks and remains unlocked until batteries are replaced.
Fail Locked[1]	Lock locks and remains locked until batteries are replaced.

1 Fail Unlocked and Fail Locked modes are not available if lock is externally powered.

EXTERNAL POWER SUPPLY

The AD-200 may be connected to external power using a UL 294 Listed Power Supply capable of sourcing at least 250 mA @ 12 to 24 VDC.

➔ *When powered with external power supply, the lock will always fail "As-Is" if power is lost.*

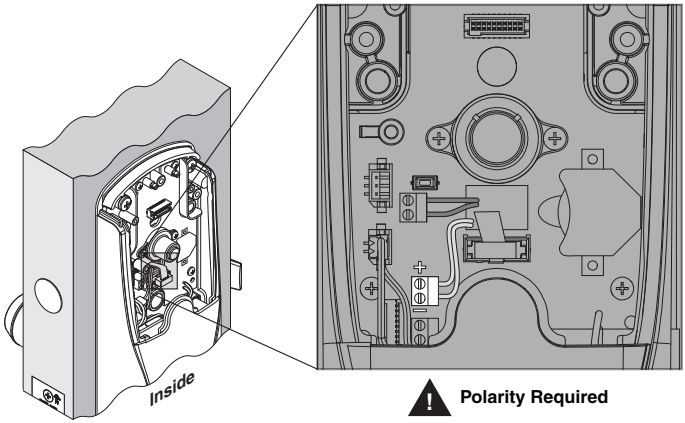

TROUBLESHOOTING

For troubleshooting, visit to www.schlage.com/support.

Ingersoll Rand
Security Technologies

© 2010 Ingersoll-Rand Company
P516-129 ENG online Rev. 03/10-b